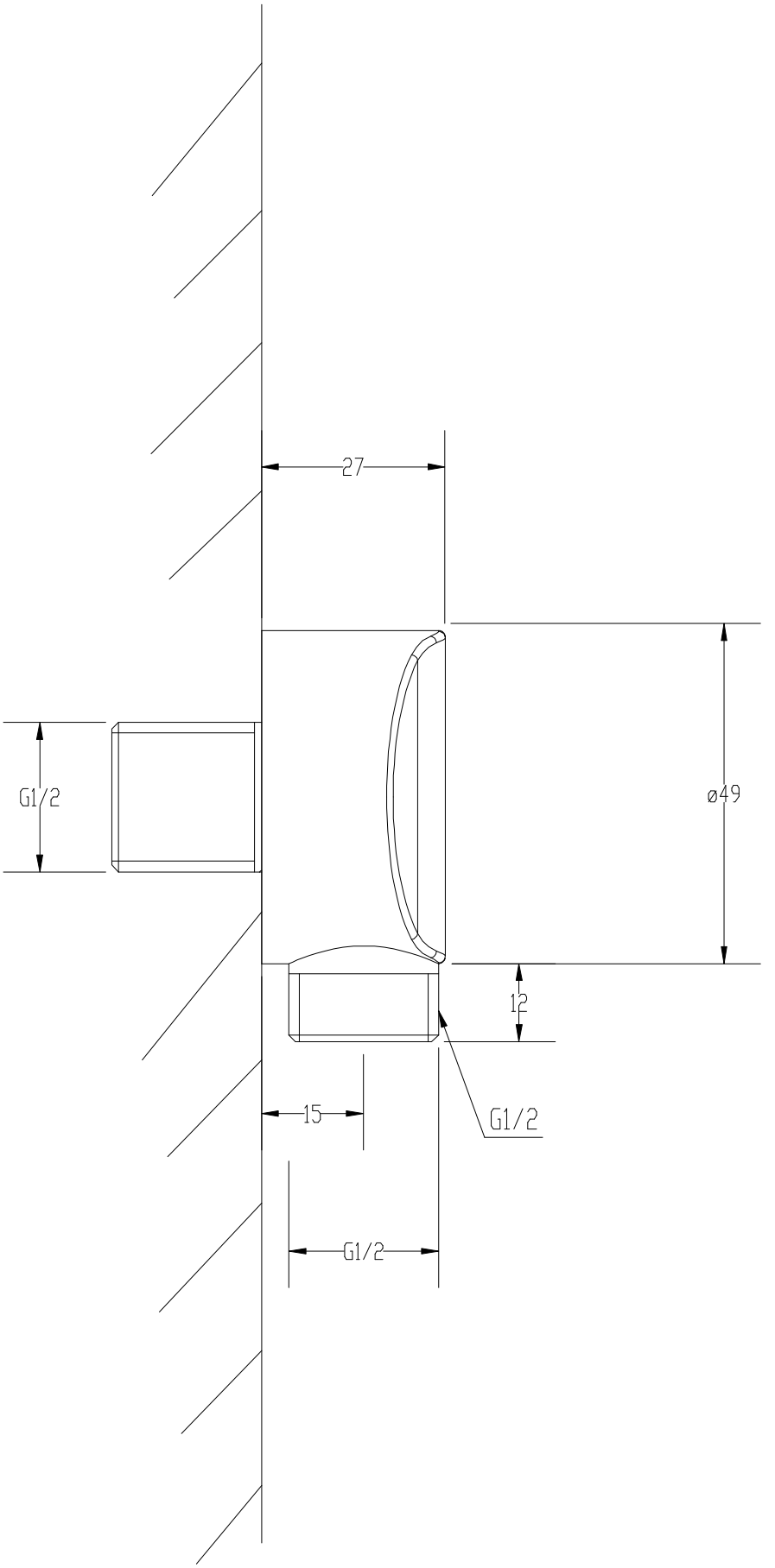
27
G1/2
ø49
12
15
G1/2
G1/2